20.1.2 Exercises - Ampere's Force 1

1. A stiff straight copper wire XY is held fixed in a uniform magnetic field of flux density 2.6×10^{-3} T, as shown in Fig.

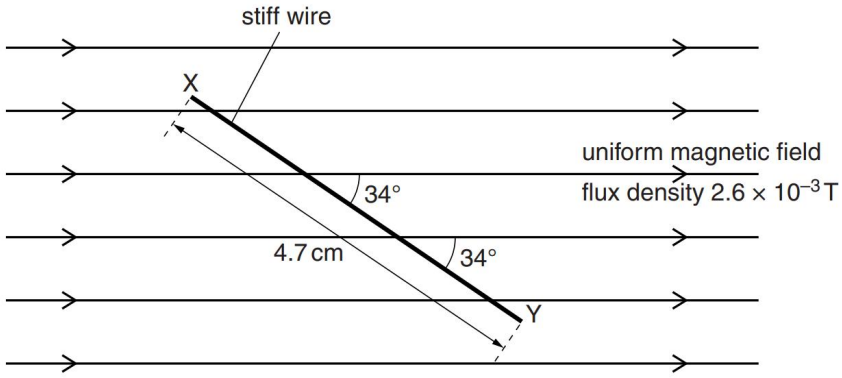

The wire XY has length 4.7 cm and makes an angle of 34° with the magnetic field.

Calculate the force on the wire due to a constant current of 5.4 A in the wire.

force = ... N [2]

2.

a. Define the tesla.

.....

..... [2]

b. Two long straight vertical wires X and Y are separated by a distance of 4.5 cm, as illustrated in Fig.

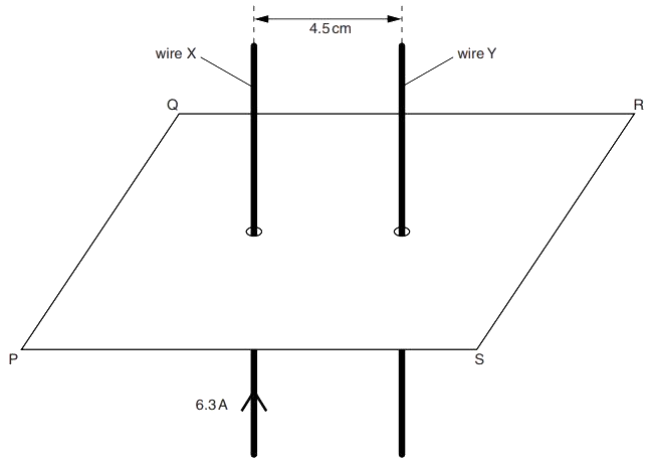

The wires pass through a horizontal card PQRS.

The current in wire X is 6.3 A in the upward direction. Initially, there is no current in wire Y.

i. On Fig., sketch, in the plane PQRS, the magnetic flux pattern due to the current in wire X. Show at least four flux lines. [3]

ii. The magnetic flux density B at a distance x from a long straight current-carrying wire is given by the expression

$$B = \frac{\mu_0 I}{2\pi x}$$

where I is the current in the wire and μ_0 is the permeability of free space. $\mu_0 = 4\pi \times 10^{-7} \text{Hm}^{-1}$

Calculate the magnetic flux density at wire Y due to the current in wire X.

flux density = ... T [2]

iii. A current of 9.3 A is now switched on in wire Y. Use your answer in (ii) to calculate the force per unit length on wire Y.

force per unit length = ... Nm^{-1} [2]

c. The currents in the two wires in (b)(iii) are not equal.

Explain whether the force per unit length on the two wires will be the same, or different.

.....

..... [2]

d. If the current in wire X and wire Y are opposite direction, what will happen to these two wire.

..... [1]

3. In the arrangement shown in Figure., the balance reading changes from 102.48 g to 104.48 g when the current is switched on.

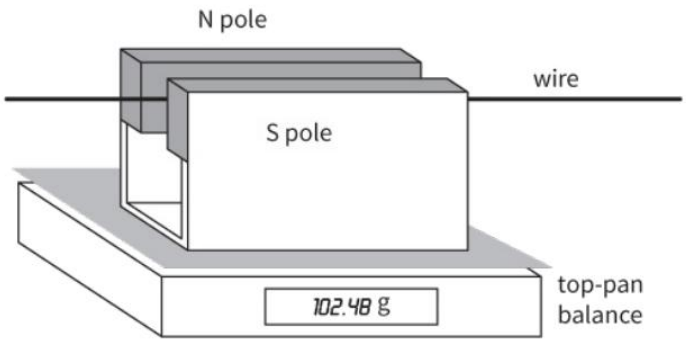

a. Explain why this happens and give the direction and the size of the force on the wire when the current is on.

.....

..... [2]

b. What is the direction of the current in the wire?

..... [1]